# Let's Talk About …Mudsills

By John Rosenthal, P. Eng. johnr@dunn-wright.ca

**Long** ago and far away, like in 1974 and Vancouver, a group of company representatives from the Scaffold Industry met to develop a standard on "Scaffolding for Construction Purposes."

One of the engineers, a soils expert, suggested that mudsills should be continuous and extend under at least two legs of the scaffold frames. No one disagreed with him, so that's what went into the proposed Standard, designated S269, and is now included in Z797 as well.

Since then, I've learned a few things about scaffolding and loading, and now I disagree. From my point of view, the only valid reason for extending a sill under two legs of a scaffold is to keep the legs of a walk-through frame from spreading under load.

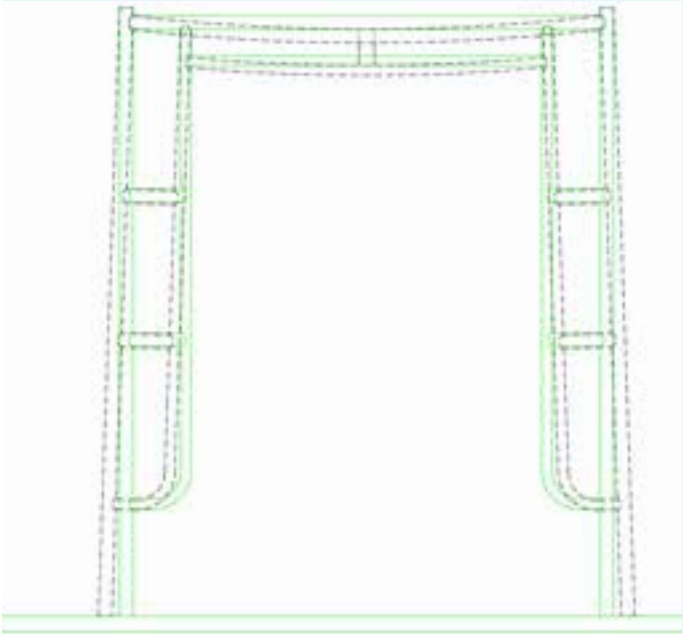

The main thing that concerns me is the loading applied to the plank being used as a sill. In many cases where a plank used as a sill, the plank is long enough to be used "up top" again. Then we have a situation where the plank we are standing on has been loaded at two points which now may have been weakened. If the scaffold was heavily loaded, say 2,500 lbs per leg on a scaffold frame, there are two places on that plank that have been loaded to 2,500/25 (5-inch square base plate) = 100 psi = 14,400 psf. Considering that Heavy-Duty loading is only 75 psf, two spots on that plank have been loaded 'way in excess of HD loading. And now we're expected to be able to work safely while standing on that plank.

**I don't want to do it!**

My instructions to my co-workers have always been that any plank we plan to use as a sill must be cut to a length less than 4 feet, so it can't be used up top again.

Let's work out the loading on a typical scaffold leg. Generally, a good "rule of thumb" number for the allowable loading of a scaffold frame leg is 2,500 lb.

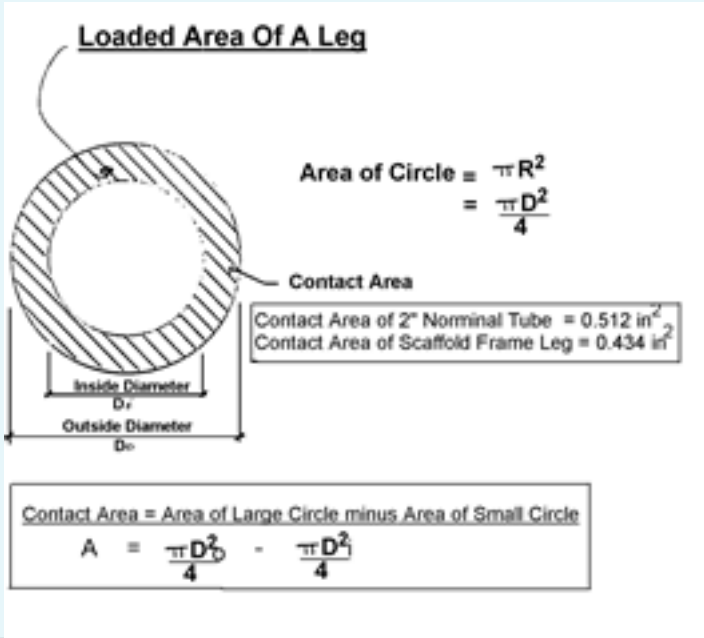

The area of contact for that scaffold leg is approximately 0.434 square inches, depending on the leg diameter and the wall thickness of the tube.

From this, we get that the pressure the leg exerts on whatever surface it's resting on is 2,500/0.434 = 5,760 pounds per square inch (psi). But when you convert that to pounds per square foot, the number becomes huge! 5,760 x 144 = 829,440 psf.

If we consider that we're building our scaffold on normal soil, the load-carrying capacity of the soil ranges from about 4,000 to 6,000 psf. So, we have to get that pressure down to a reasonable value, less than 4,000.

**Step one:** add a base plate. Base plates are usually about 5 inches square. If we transfer the load from the leg onto the base plate, we get 2,500/25 = 100 psi or 14,400 psf.

Still too high for our purposes – the scaffold and base plates would sink down into the ground.

So we need to spread the load a little more.

**Step two:** add a mud sill. It would seem obvious that we would use an old, used scaffold plank for the mud sill. The plank is 10 inches wide and two inches thick. Here in Ontario, we're supposed to be using rough 2x10 planks, which gives us (pretty close to) the right dimensions.

Load is transferred through a plank on approximately a 45 degree angle.

Because the plank is 2" thick, we gain two inches in every direction from the base plate. To make calculations a little easier, let's make the base plate 6 inches square for now.

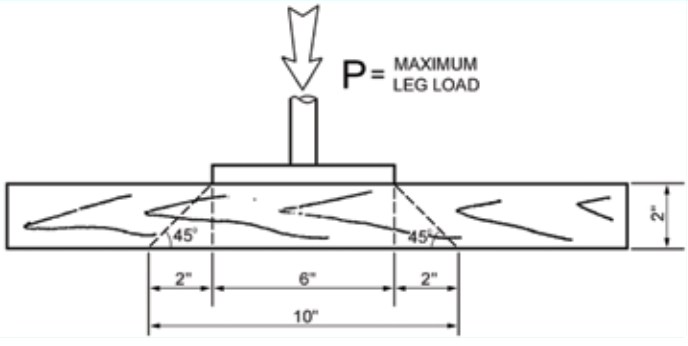


The area the load is transferred over becomes 10 inches by 10 inches = 100 square inches. The pressure becomes 2,500/100 = 25 psi or 3,600 psf.

This has got us into a workable area. If we agree that our sill should extend about 12 inches both sides of the leg, our sill should be 2 feet long.

That tells us that there really is no need to have the sill extending across two scaffold legs.

We could do a more sophisticated calculation involving Moments, Section Modulus, Shear Strength and Bearing Strength, and we'd come up with approximately the same result. But that's far more complicated and time-consuming, so if we just take the "easy way," we get the answer we want.

The end result is: there's no need to have a sill extend under two legs of a scaffold, unless you want to, for a particular purpose.



*John Rosenthal, P.Eng. is President of Dunn-Wright Engineering Inc., in Caledon, Ontario. Rosenthal also serves as SIAC International Director. E-mail him at:*
*johnr@Dunn-Wright.ca*